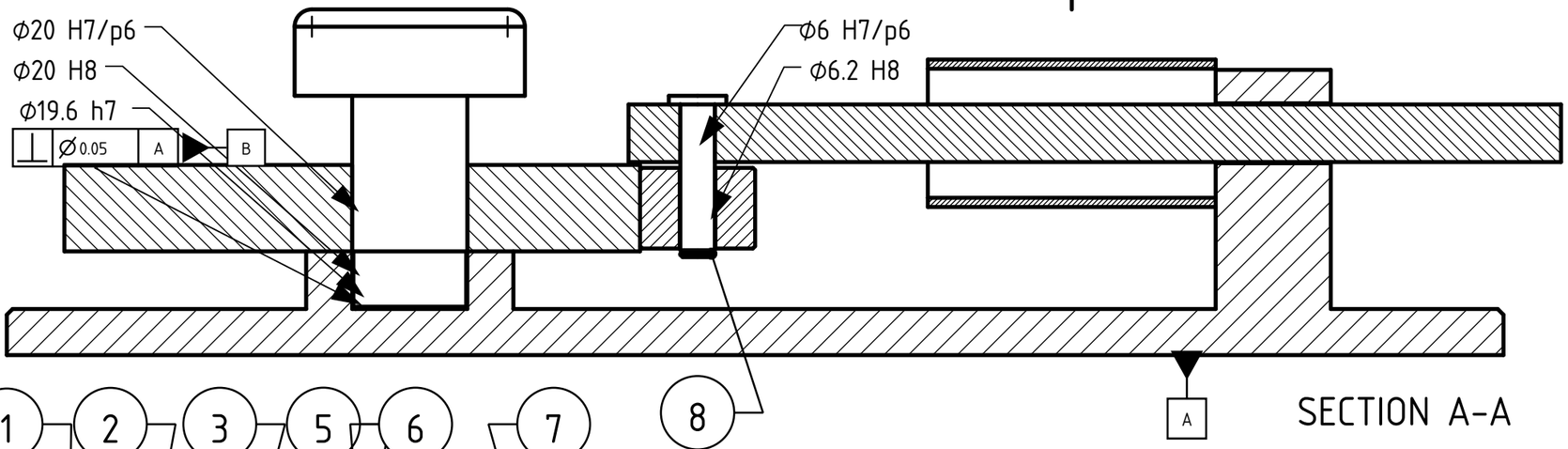

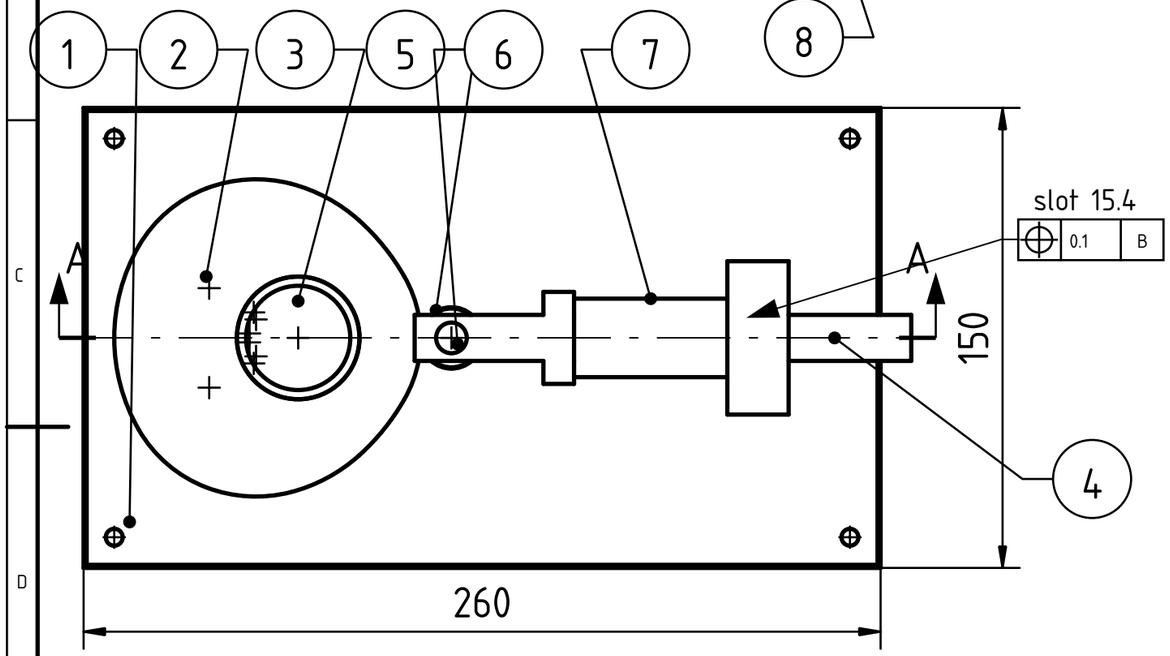

Plan (1 : 2)

Item	Qty	Name	Material	Note
1	1	Base	EN AW-6082 T6	bore 20 H8, slot 15.4
2	1	Cam	Steel C45	bore 20 H7
3	1	Shaft with knob	Steel 1.4305	20 p6, 19.6 h7
4	1	Stem	Brass CW614N	15 h7, pin hole 6 H7
5	1	Roller	Bronze CuSn8	bore 6.2 H8
6	1	Roller pin	Steel 1.4305	6 p6, ground
7	1	Spring, wire 1.6	Spring steel	coil 24, bought
8	1	E-clip, groove 4.8	Spring steel	bought, not drawn

GD&T, ISO 1101:2017

Datum A: the underside of the base.

Datum B: the axis of the boss bore.

Perpendicularity ϕ0.05 to A, the bore: the cam turns flat, square to the roller.

Position 0.1 to B, the slot: the follower moves on a line through the cam axis, so the lift follows the cam as designed.

FITS, ISO 286-2 (mm). General tolerances ISO 2768-m. First angle projection.

Cam on the shaft: ϕ20 H7 20.000 / 20.021, shaft ϕ20 p6 20.022 / 20.035: interference 0.001 to 0.035.

Shaft in the boss: ϕ20 H8 20.000 / 20.033, shaft ϕ19.6 h7 19.579 / 19.600: clearance 0.400 to 0.454.

Roller pin in the stem: ϕ6 H7 6.000 / 6.012, pin ϕ6 p6 6.012 / 6.020: interference 0 to 0.020.

Roller on its pin: ϕ6.2 H8 6.200 / 6.222 on ϕ6 p6: clearance 0.180 to 0.210.

Stem 15 h7 14.982 / 15.000 in slot 15.4 ± 0.2: clearance 0.200 to 0.618.

Spring shown simplified (ISO 2162-1). Break sharp edges 0.2.

Part Material: See item list

General tolerances: ISO 2768-m

Scale: 1 : 1, plan 1 : 2

Title, supplementary title: Cam and roller follower Assembly drawing, base circle 40 FreeCAD course, cam and follower	Created by: siwit.co/CAD6 Approved by: Dr. Sam Macharia		Owner: siliconwit.com
Document type: Assembly drawing	Drawing number: siwit.co/CAD6		Responsible department: Design
Document status: Released	Language: en	Issue date: 2026-11-18	Revision: A / Sheet: 1 / 1