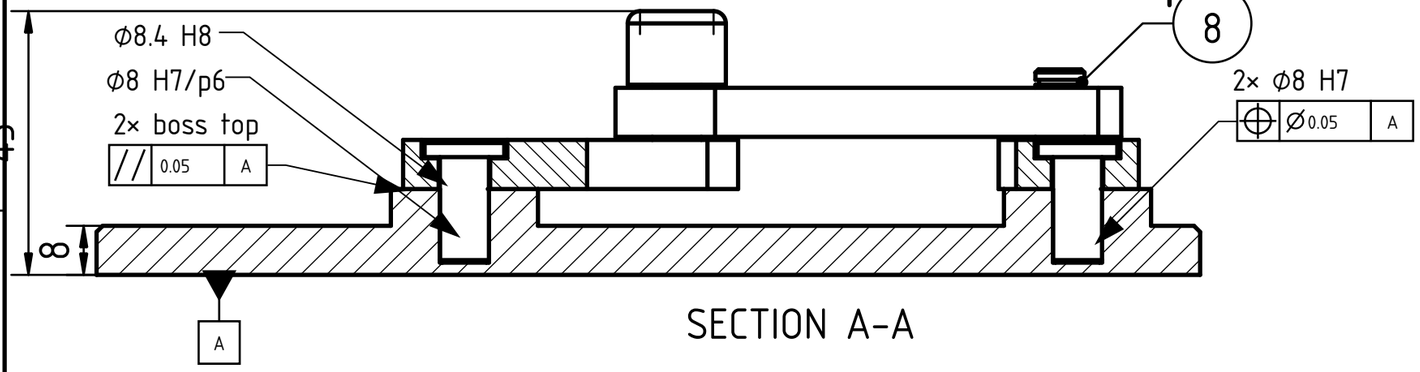

SECTION A-A

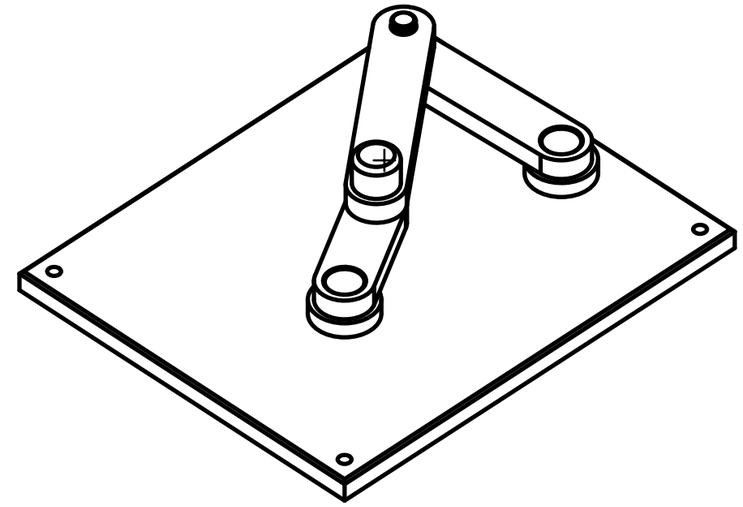

Pictorial view, 1 : 2

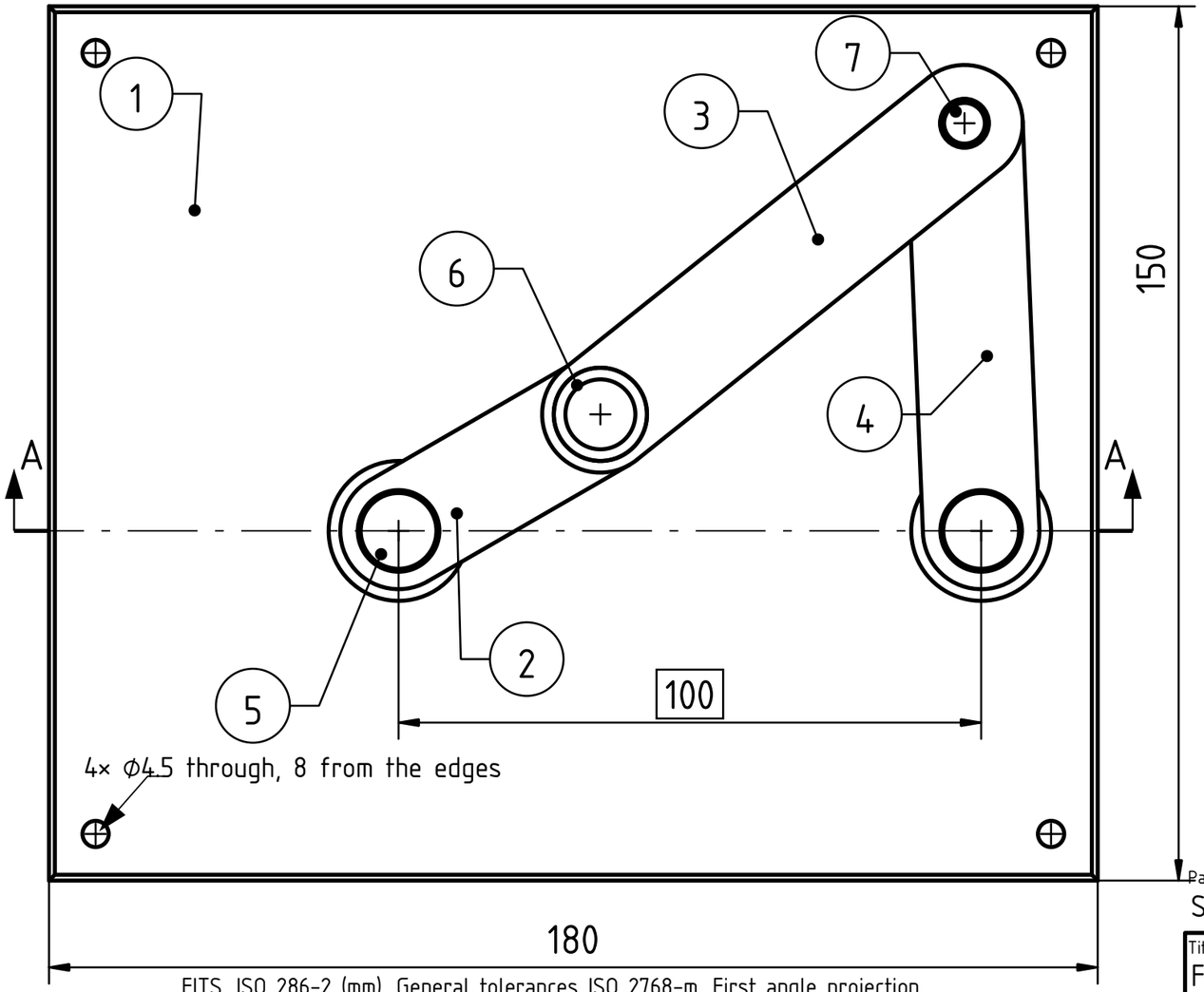

Item	Qty	Name	Material	Note
1	1	Base, link 1 (ground)	EN AW-6082 T6	bores 8 H7
2	1	Link 2, crank	EN AW-6082 T6	A 8.4 H8, C 8 H7
3	1	Link 3, coupler	EN AW-6082 T6	C, D 8.4 H8
4	1	Link 4, follower	EN AW-6082 T6	B 8.4 H8, D 8 H7
5	2	Pivot pin, head 13	Steel 1.4305	8 p6, ground
6	1	Crank pin with knob	Steel 1.4305	8 p6, ground
7	1	Pin D, clip groove	Steel 1.4305	8 p6, ground
8	1	E-clip, groove 6.8	Spring steel	bought, not drawn

GD&T, ISO 1101:2017

Datum A: the underside of the base, where it stands.

Position ϕ0.05 to A: the two bores stay 100 apart and square to A, so the ground link and the pins are true.

Parallelism 0.05 to A: the boss tops, so the links do not rock.

FITS, ISO 286-2 (mm). General tolerances ISO 2768-m. First angle projection.

Pins in base, crank C, follower D: ϕ8 H7 8.000 / 8.015, pin ϕ8 p6 8.015 / 8.024 interference 0 to 0.024: each pin is pressed in and stays.

Links on the pins: ϕ8.4 H8 8.400 / 8.422, pin ϕ8 p6: clearance 0.376 to 0.407. The link turns, and the pin passes through it to its bore.

Break sharp edges 0.2.

Part Material: See item list

General tolerances: ISO 2768-m

Scale: 1 : 1

Title, supplementary title: Four-bar linkage 100 / 40 / 80 / 70 Assembly drawing, crank at 30° FreeCAD course, four-bar linkage	Created by: siwit.co/CAD2 Approved by: Dr. Sam Macharia		Owner: siliconwit.com
Document type: Assembly drawing	Drawing number: siwit.co/CAD2		Responsible department: Design
Document status: Released	Language: en	Issue date: 2026-11-18	Revision: A Sheet: 1 / 1