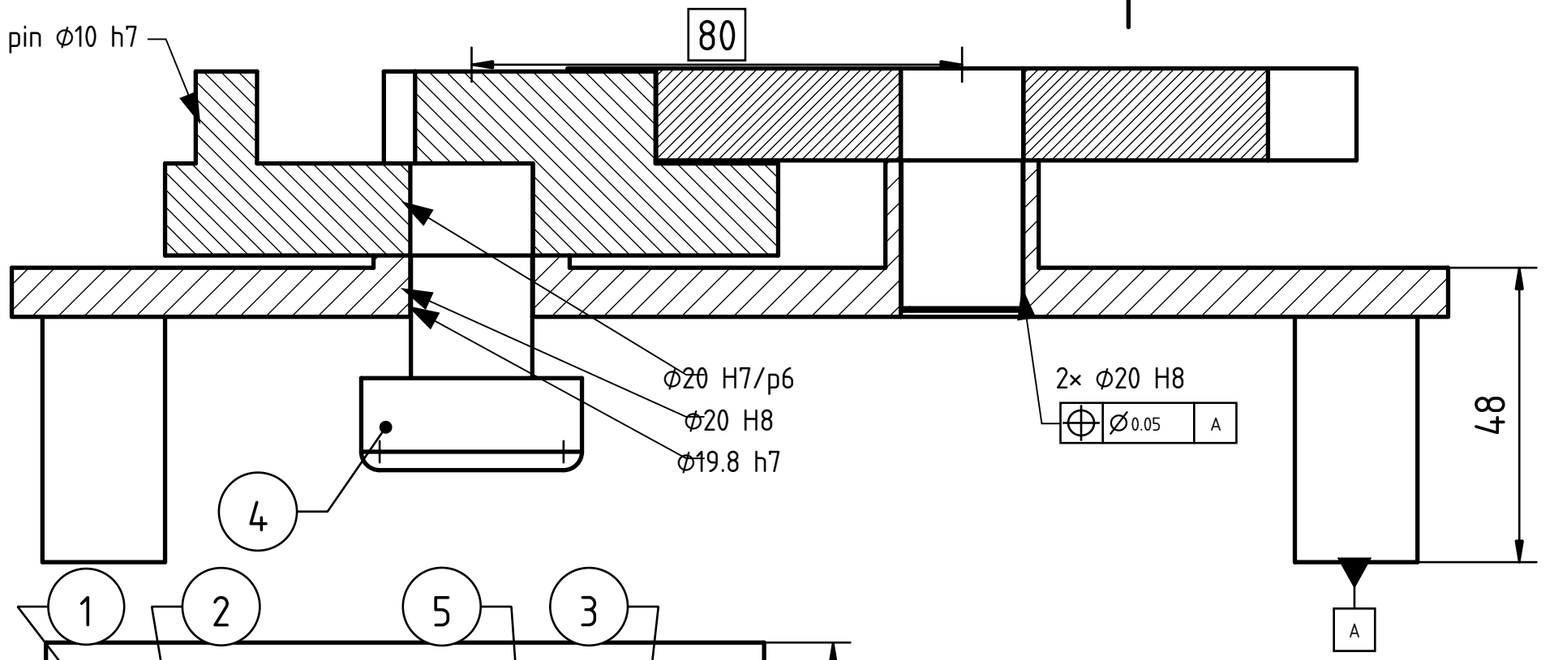

SECTION A-A

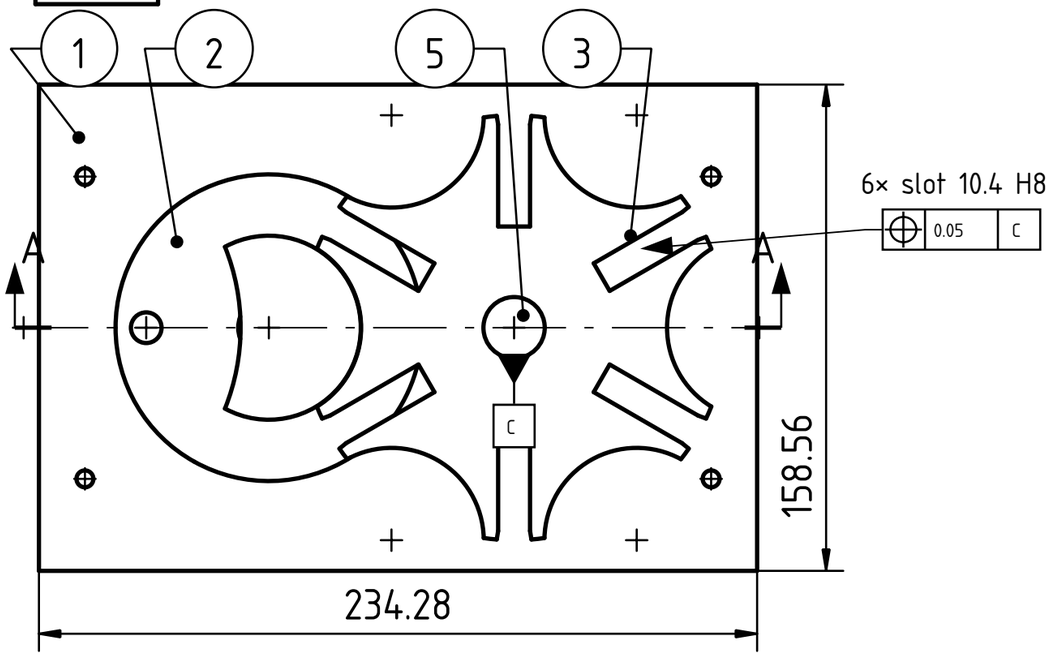

Plan (1 : 2)

Item	Qty	Name	Material	Note
1	1	Frame, on four feet	EN AW-6082 T6	2× bore 20 H8
2	1	Driver with pin	Steel C45	bore 20 H7, pin 10 h7
3	1	Geneva wheel, 6 slots	Steel C45	bore 20 H7, slots 10.4 H8
4	1	Driver shaft, knob 36	Steel 1.4305	20 p6, 19.8 h7
5	1	Wheel shaft	Steel 1.4305	20 p6, 19.8 h7

GD&T, ISO 1101:2017

Datum A: the feet the frame stands on.

Datum C: the bore of the wheel.

Position ⌀0.05 to A: the two bores, 80 apart and square to A, so the pin meets each slot square on and the shafts stay parallel.

Position 0.05 to C: the six slots, so each step is 60° and the wheel stops in line.

FITS, ISO 286-2 (mm). General tolerances ISO 2768-m. First angle projection.

Driver and wheel on their shafts: ⌀20 H7 20.000 / 20.021, shaft ⌀20 p6 20.022 / 20.035: interference 0.001 to 0.035, pressed on, they turn with the shaft.

Shafts in the frame: ⌀20 H8 20.000 / 20.033, shaft ⌀19.8 h7 19.779 / 19.800: clearance 0.200 to 0.254.

Pin in a slot: slot 10.4 H8 10.400 / 10.427, pin ⌀10 h7 9.985 / 10.000: clearance 0.400 to 0.442.

Locking disc in its hollow: 0.2 mm on the radius, ISO 2768-m. Break sharp edges 0.2.

Part Material: See item list

General tolerances: ISO 2768-m

Scale: 1 : 1, plan 1 : 2

Title, supplementary title: Geneva drive, 6 slots Assembly drawing, centres 80 FreeCAD course, Geneva drive	Created by: siwit.co/CAD7 Approved by: Dr. Sam Macharia		Owner: siliconwit.com
Document type: Assembly drawing	Drawing number: siwit.co/CAD7		Responsible department: Design
Document status: Released	Language: en	Issue date: 2026-11-18	Revision: A / Sheet: 1 / 1

A3