4× ⌀3.4 through, countersink ⌀6.4 × 90°

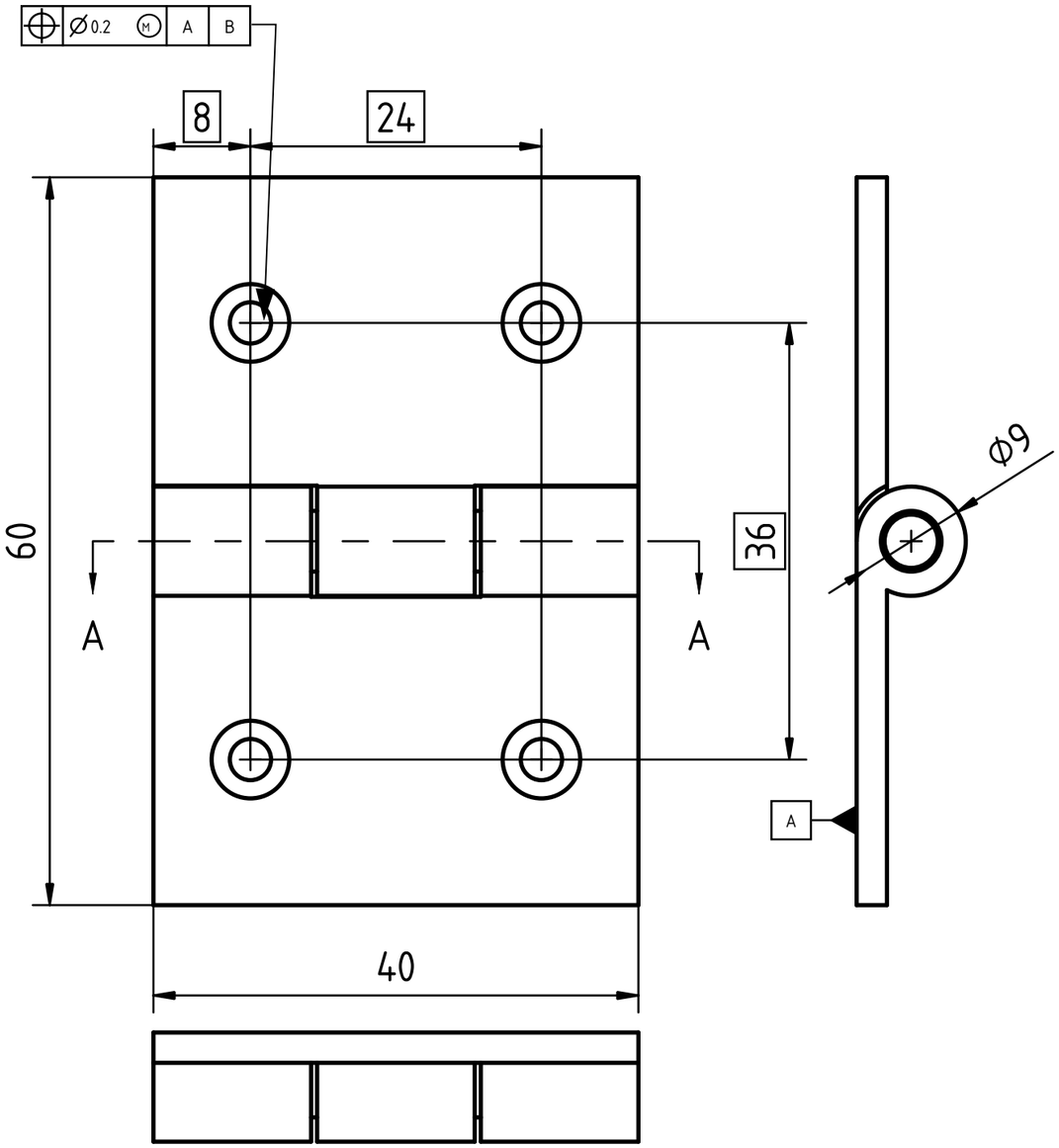

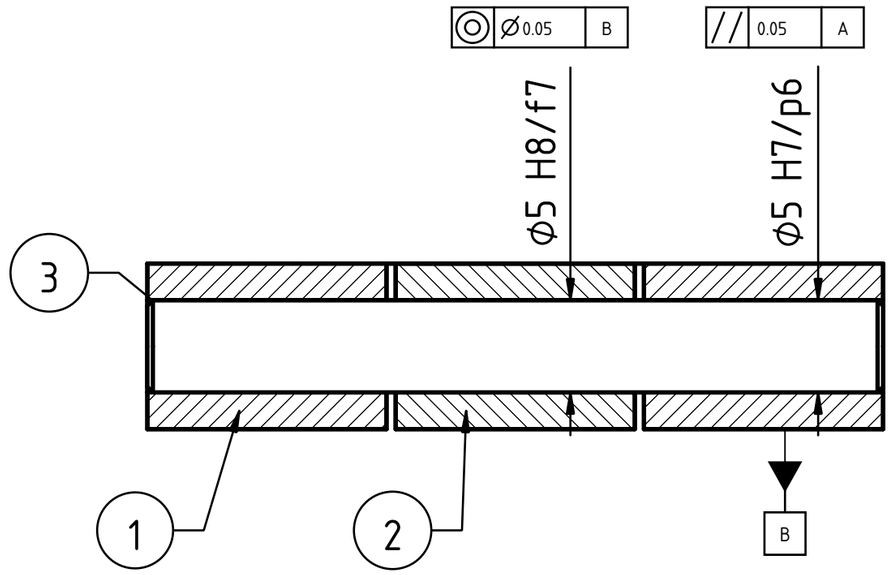

SECTION A–A (3 : 1)

Item	Qty	Name	Material	Note
1	1	Leaf A, two knuckles	Stainless steel 1.4301	bores 5 H7
2	1	Leaf B, one knuckle	Stainless steel 1.4301	bore 5 H8
3	1	Pin	Stainless steel 1.4305	ends 5 p6, middle 5 f7

FITS, ISO 286-2 (mm)

Leaf B on the pin: ⌀5 H8 5.000 / 5.018, pin ⌀5 f7 4.978 / 4.990

clearance 0.010 to 0.040: leaf B turns freely

Pin in leaf A: ⌀5 H7 5.000 / 5.012, pin ⌀5 p6 5.012 / 5.020

interference 0 to 0.020: the pin is pressed in and stays

The pin is ground to two diameters: p6 at the ends, f7 in the middle.

Datum A: back face of leaf A. Datum B: common axis of the leaf A bores.

General tolerances ISO 2768-m. Break sharp edges 0.2. First angle projection.

Part Material: See item list

General tolerances: ISO 2768-m

Scale: 2 : 1

Title, supplementary title: Butt hinge 40 x 60 Assembly drawing, open flat FreeCAD course, lesson 0	Created by: siwit.co/CAD0 Approved by: Dr. Sam Macharia		Owner: siliconwit.com
Document type: Assembly drawing	Drawing number: siwit.co/CAD0		Responsible department: Design
Document status: Released	Language: en	Issue date: 2026-11-18	Revision: A / Sheet: 1 / 1

A3