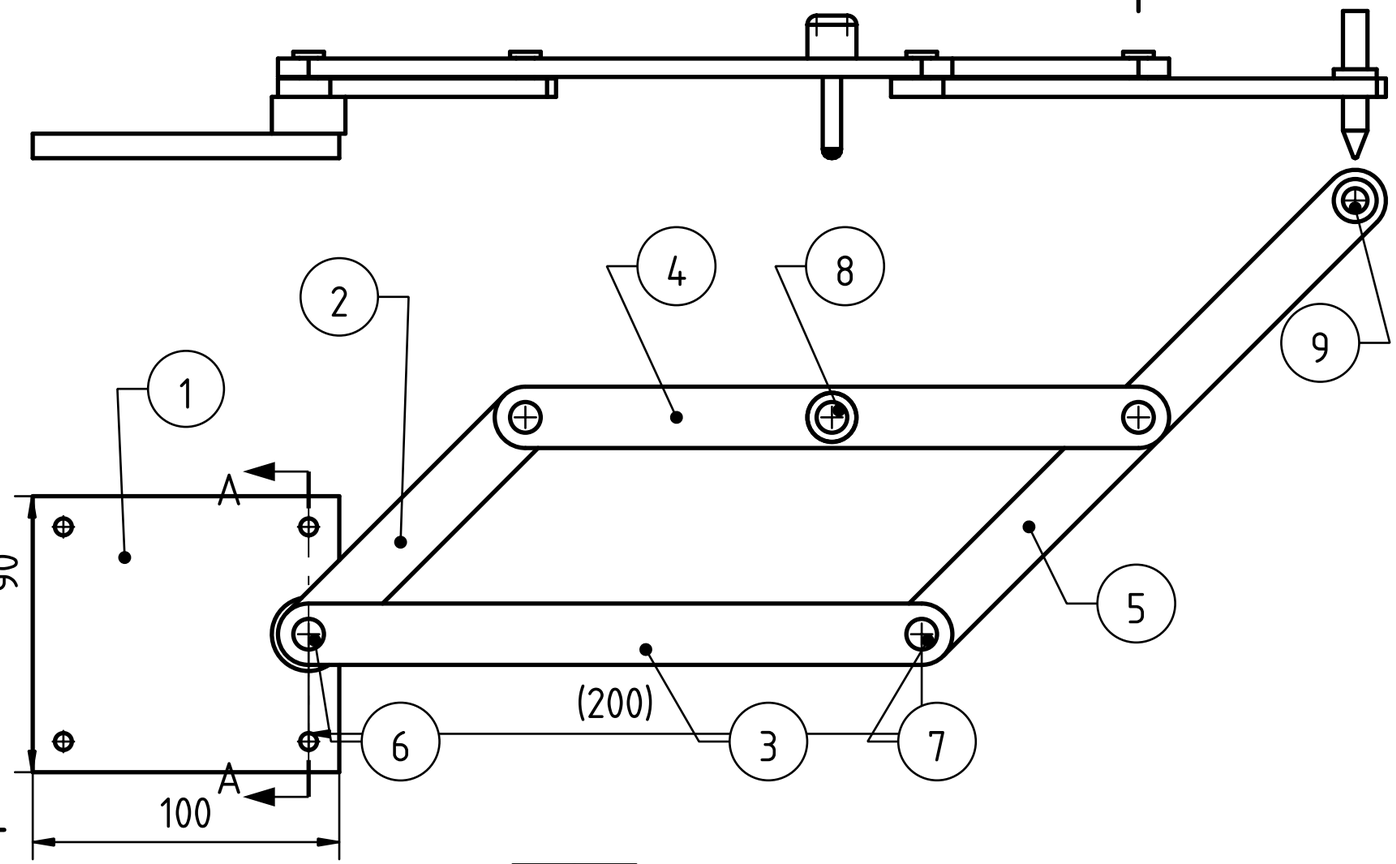

Item	Qty	Name	Material	Note
1	1	Base	EN AW-6082 T6	bore 6 H7
2	1	Link OA, 100	EN AW-6082 T6	O 6.2 H8, A 6 H7
3	1	Link OB, 200	EN AW-6082 T6	O, B 6.2 H8
4	1	Input arm A-I-Q	EN AW-6082 T6	A, Q 6.2 H8, I 6 H7
5	1	Output arm B-Q-P	EN AW-6082 T6	B, Q 6 H7, P 8.2
6	1	Pivot pin, head 10	Steel 1.4305	6 p6, ground
7	3	Pin, head 10	Steel 1.4305	6 p6, ground
8	1	Stylus, knob 16	Steel 1.4305	6 p6, ground
9	1	Pen or pencil, ⌀8	bought	loose in ⌀8.2

FITS, ISO 286-2 (mm). General tolerances ISO 2768-m.
First angle projection.
Pins pressed in (pivot, A, B, Q) and the stylus:
⌀6 H7 6.000 / 6.012, pin ⌀6 p6 6.012 / 6.020,
interference 0 to 0.020: pressed in, they stay.
Links on the pins: ⌀6.2 H8 6.200 / 6.222 on ⌀6 p6,
clearance 0.180 to 0.210: the links turn freely.
Pen hole ⌀8.2: to suit the pen. Base: 4× ⌀5.5 through.
Break sharp edges 0.2.

GD&T, ISO 1101:2017. Datum A: the underside of the base.
Perpendicularity ⌀0.05 to A, the pivot bore, and
parallelism 0.05 to A, the boss top: the links turn flat,
so the pen stays on the paper and the copy stays true.

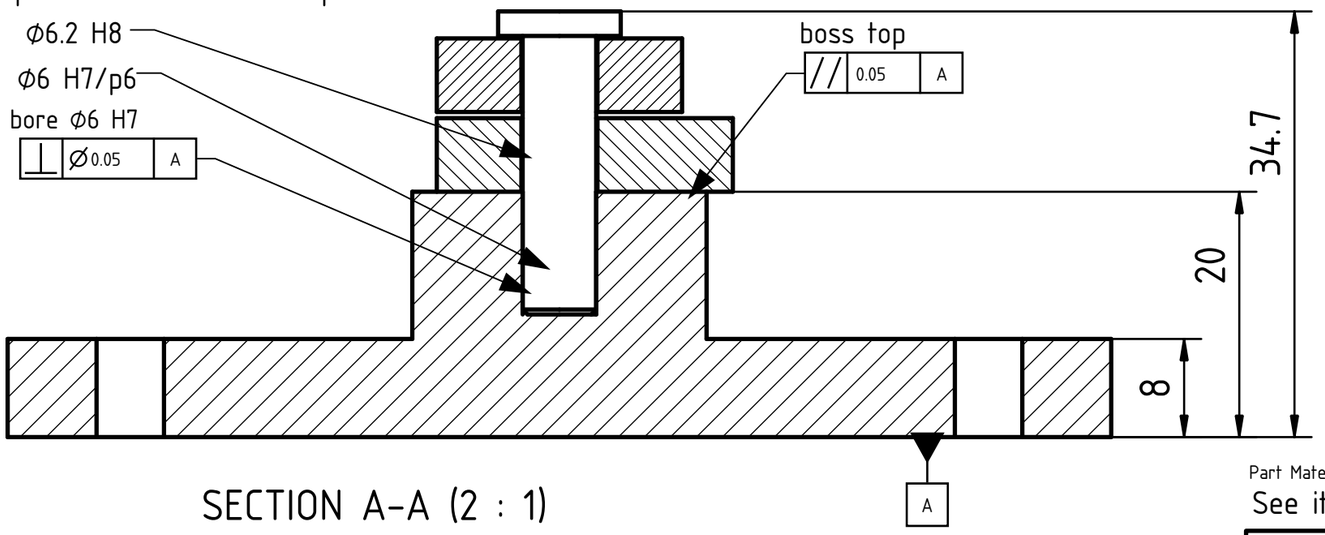

SECTION A-A (2 : 1)

Part Material: See item list

General tolerances: ISO 2768-m

Scale: 1 : 2, A-A 2 : 1

Title, supplementary title: Pantograph, scale 2 : 1 Assembly drawing, links 100 and 200 FreeCAD course, pantograph	Created by: siwit.co/CAD5 Approved by: Dr. Sam Macharia		Owner: siliconwit.com
Document type: Assembly drawing	Drawing number: siwit.co/CAD5		Responsible department: Design
Document status: Released	Language: en	Issue date: 2026-11-18	Revision: A Sheet: 1 / 1

A3