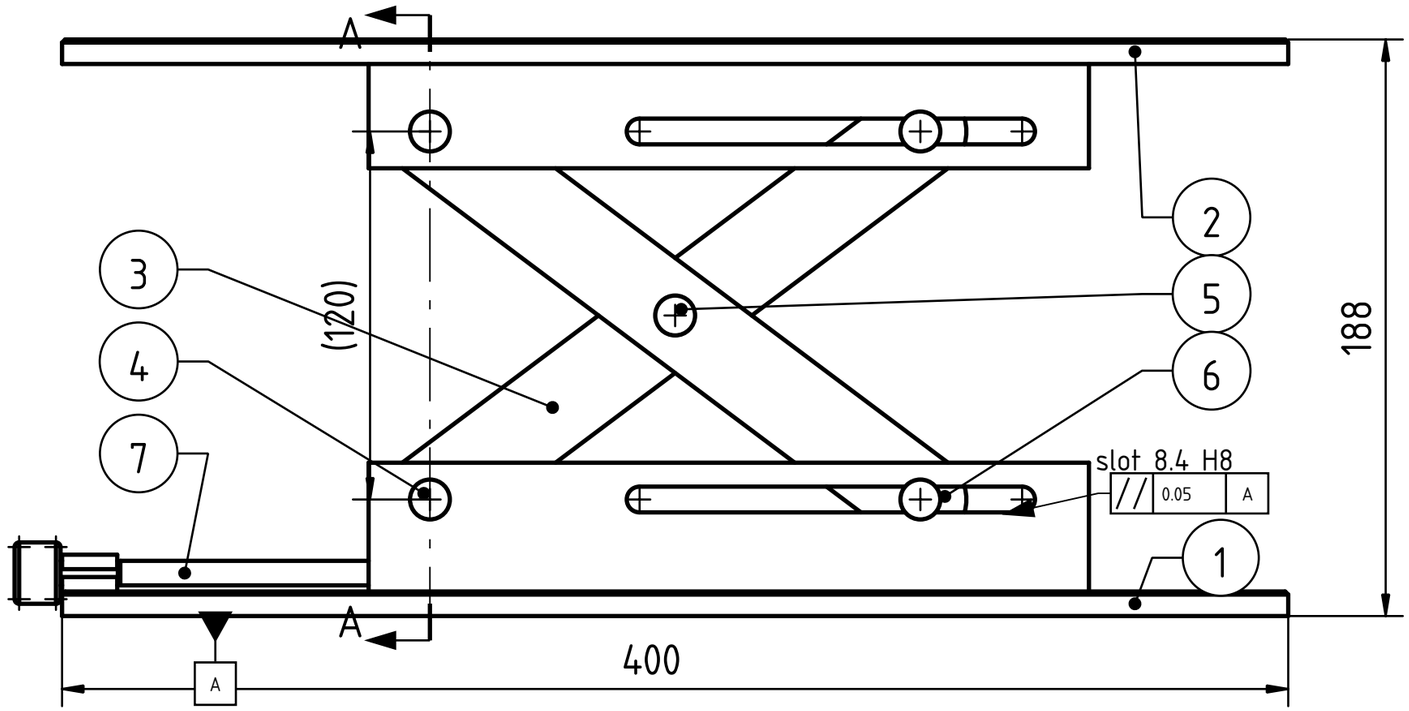

SECTION A–A (1 : 1)

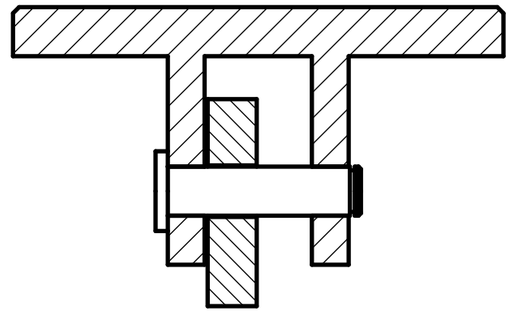

Item	Qty	Name	Material	Note
1	1	Base	EN AW-6082 T6	holes 8 H7, slots 8.4 H8
2	1	Top platform	EN AW-6082 T6	holes 8 H7, slots 8.4 H8
3	2	Scissor arm	EN AW-6082 T6	3× 8.4 H8
4	4	Shaft, head 13	Steel 1.4305	8 p6, ground
5	1	Centre pin, head 13	Steel 1.4305	8 p6, ground
6	1	Nut block	Bronze CuSn8	8 H7, M8 × 1.25-6H
7	1	Lead screw, knob 20	Steel 1.0715	M8 × 1.25-6g
8	6	E-clip, groove 6.8	Spring steel	bought, not drawn

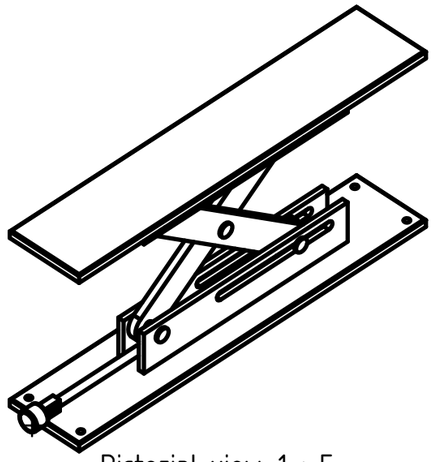

Pictorial view, 1 : 5

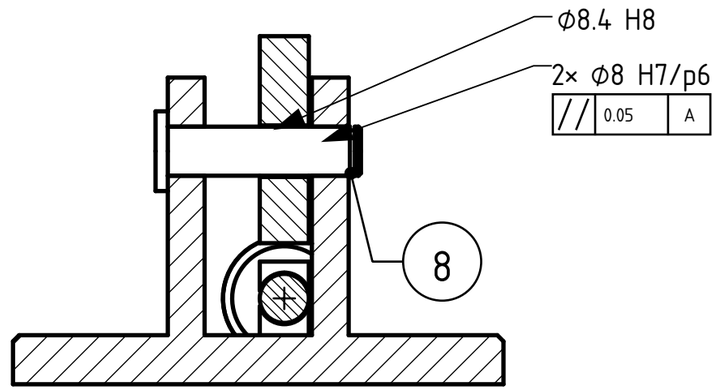

FITS, ISO 286-2 (mm). General tolerances ISO 2768-m. First angle projection.

Shafts in the cheek holes and the nut block: ⌀8 H7 8.000 / 8.015, shaft ⌀8 p6 8.015 / 8.024, interference 0 to 0.024: pressed in, they stay.

Arms on the shafts and centre pin, sliding shafts in the slots: ⌀8.4 H8 8.400 / 8.422 on shaft ⌀8 p6: clearance 0.376 to 0.407. Lead screw M8 × 1.25 in the bearing hole ⌀8.4.

GD&T, ISO 1101:2017. Datum A: the underside of the base.

Parallelism 0.05 to A, the fixed pivot holes and the slots: the arms turn square to the base and the sliding shafts stay at one height, so the top stays level. Break sharp edges 0.2.

Part Material: See item list

General tolerances: ISO 2768-m

Scale: 1 : 2, A–A 1 : 1

Title, supplementary title: Scissor lift, arms 200 Assembly drawing, top raised 120 FreeCAD course, scissor lift	Created by: siwit.co/CAD3 Approved by: Dr. Sam Macharia			Owner: siliconwit.com	
Document type: Assembly drawing	Drawing number: siwit.co/CAD3			Responsible department: Design	
Document status: Released	Language: en	Issue date: 2026-11-18		Revision: A	Sheet: 1 / 1

A3