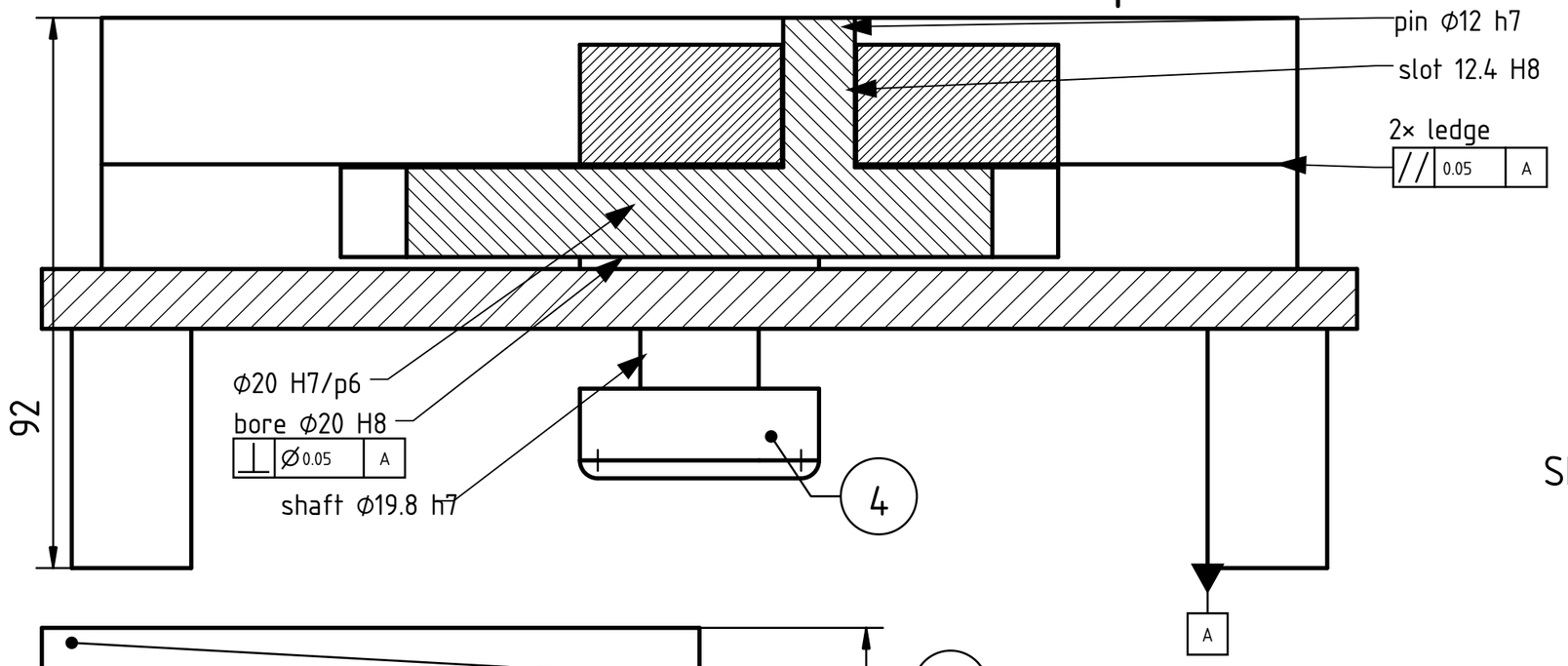

Item	Qty	Name	Material	Note
1	1	Frame, rails and feet	EN AW-6082 T6	bore 20 H8, rails 140.4
2	1	Crank with pin	Steel C45	bore 20 H7, pin 12 h7
3	1	Yoke	Bronze CuSn8	slot 12.4 H8, width 140
4	1	Shaft, knob 40	Steel 1.4305	20 p6, 19.8 h7

SECTION A-A

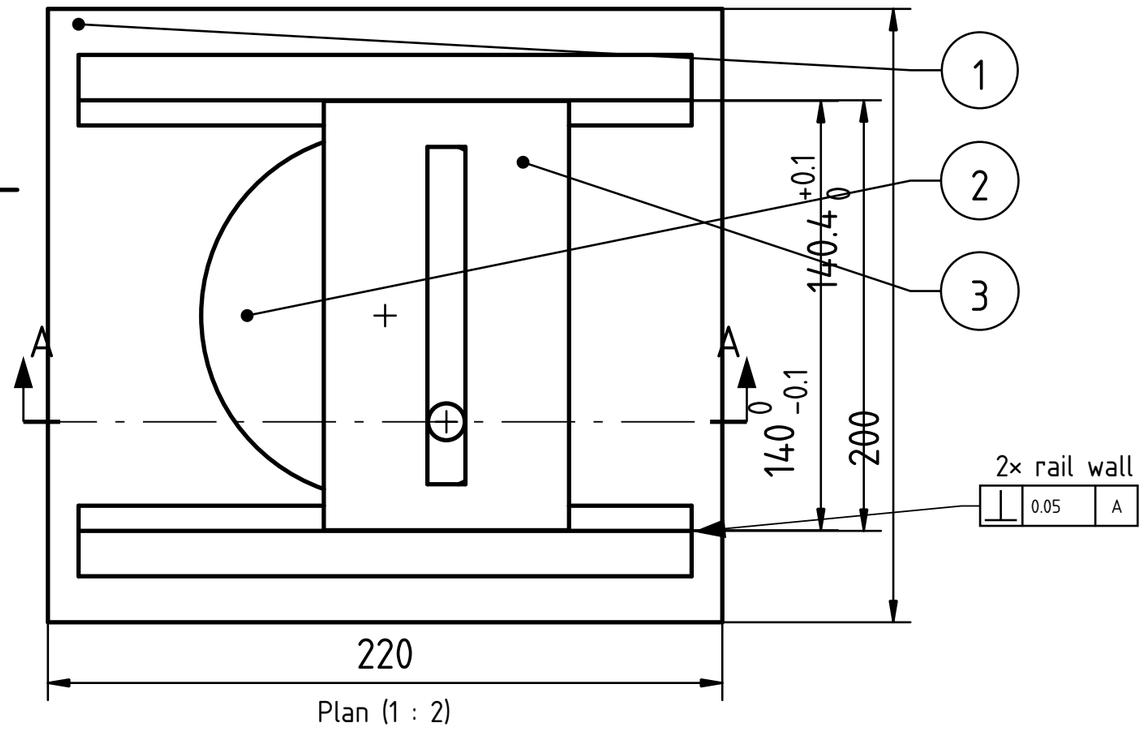

Plan (1 : 2)

GD&T, ISO 1101:2017

Parallelism 0.05 to A, the ledges: the yoke slides level, clear of the crank disk.

Perpendicularity 0.05 to A, the rail walls: the yoke slides without climbing.

FITS, ISO 286-2 (mm). General tolerances ISO 2768-m. First angle projection.

Crank on the shaft: ϕ20 H7 20.000 / 20.021, shaft ϕ20 p6 20.022 / 20.035: interference 0.001 to 0.035.

Shaft in the bore: ϕ20 H8 20.000 / 20.033, shaft ϕ19.8 h7 19.779 / 19.800: clearance 0.200 to 0.254.

Pin in the slot: slot 12.4 H8 12.400 / 12.427, pin ϕ12 h7 11.982 / 12.000: clearance 0.400 to 0.445.

Yoke 140 (0 / −0.1) between the rail walls 140.4 (+0.1 / 0): clearance 0.4 to 0.6.

Datum A: the feet. Perpendicularity ϕ0.05 to A, the bore: the crank turns flat. Break sharp edges 0.2.

Part Material: See item list

General tolerances: ISO 2768-m

Scale: 1 : 1, plan 1 : 2

Title, supplementary title: Scotch yoke, crank 40 Assembly drawing, crank at 30° FreeCAD course, Scotch yoke	Created by: siwit.co/CAD8 Approved by: Dr. Sam Macharia		Owner: siliconwit.com
Document type: Assembly drawing	Drawing number: siwit.co/CAD8		Responsible department: Design
Document status: Released	Language: en	Issue date: 2026-11-18	Revision: A / Sheet: 1 / 1

A3