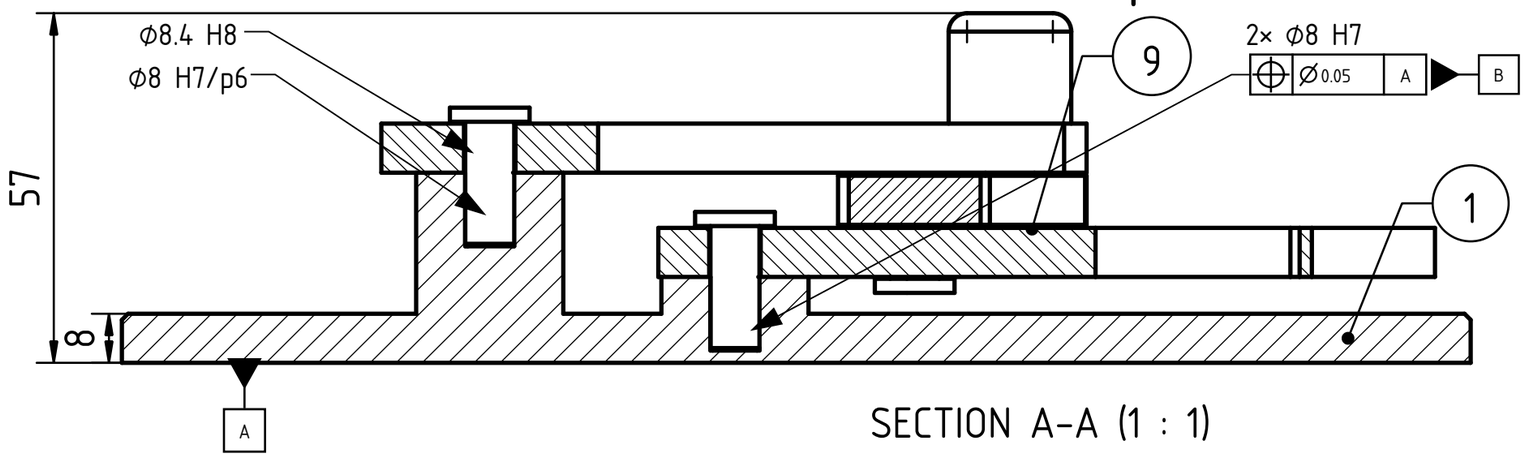

SECTION A-A (1 : 1)

Item	Qty	Name	Material	Note
1	1	Base	EN AW-6082 T6	bores 8 H7, 6 H7
2	1	Handle	EN AW-6082 T6	O 8.4 H8, C 8 H7
3	1	Main link	EN AW-6082 T6	C 8.4 H8, P 8 H7
4	1	Clamp arm	EN AW-6082 T6	Q, P 8.4 H8
5	2	Pivot pin, head 13	Steel 1.4305	8 p6, ground
6	1	Knob pin, knob 20	Steel 1.4305	8 p6, clip groove
7	1	Pin P, head 13	Steel 1.4305	8 p6, ground
8	2	Stop pin 6 × 35	Steel 1.4305	6 p6, ground
9	1	E-clip, groove 6.8	Spring steel	bought, not drawn

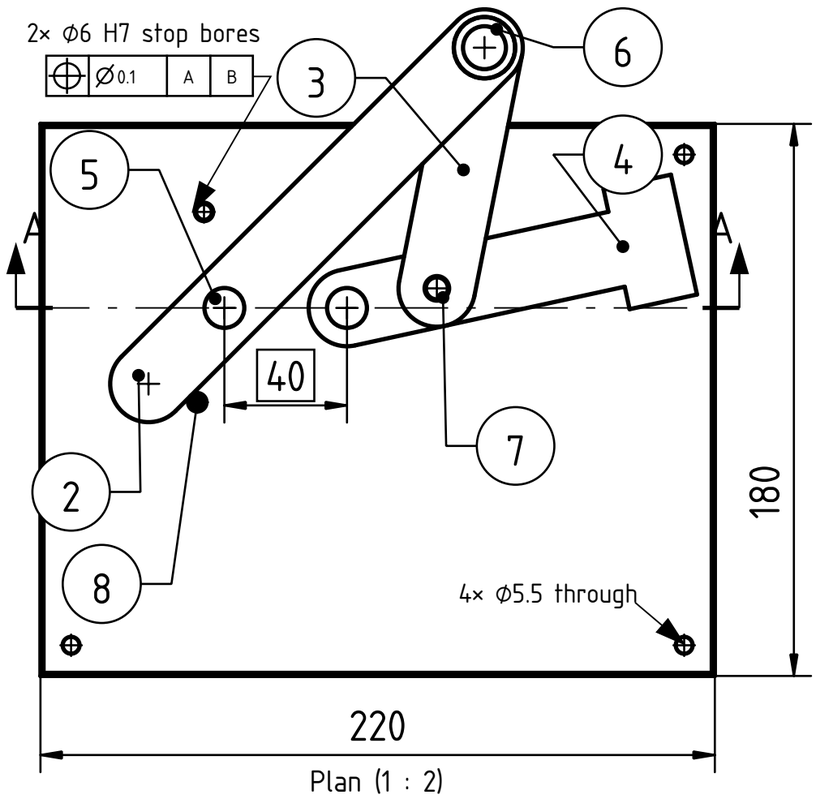

Plan (1 : 2)

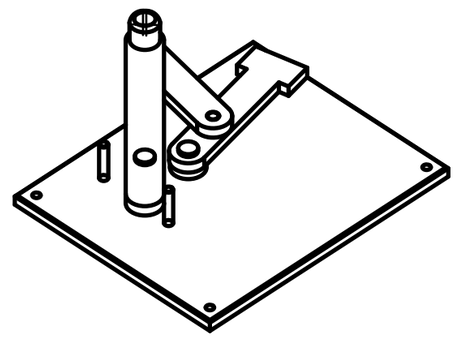

Pictorial view, 1 : 4

GD&T, ISO 1101:2017
Datum A: the underside of the base.
Datum B: the two pivot bores O and Q.
Position ϕ0.05 to A: the bores stay 40 apart and square to A, so the linkage moves as designed.
Position ϕ0.1 to A and B: the stop bores, so the handle stops 5° past dead centre and the clamp locks.

FITS, ISO 286-2 (mm). General tolerances ISO 2768-m. First angle projection.
Pins in bores O and Q, knob pin in the handle, pin P in the main link: ϕ8 H7 8.000 / 8.015, pin ϕ8 p6 8.015 / 8.024: interference 0 to 0.024, pressed in, they stay.
Handle, main link and arm on the pins: ϕ8.4 H8 8.400 / 8.422 on ϕ8 p6: clearance 0.376 to 0.407.
Stop pins: ϕ6 H7 6.000 / 6.012, pin ϕ6 p6 6.012 / 6.020: interference 0 to 0.020.
Stop bores from O (theoretically exact): x −8.84, y −30.76 and x −6.64, y 31.31.
Break sharp edges 0.2.

Part Material: See item list
General tolerances: ISO 2768-m
Scale: 1 : 2, A-A 1 : 1

Title, supplementary title: Toggle clamp, handle 120 Assembly drawing, open at 45° FreeCAD course, toggle clamp	Created by: siwit.co/CAD4 Approved by: Dr. Sam Macharia		Owner: siliconwit.com	
Document type: Assembly drawing	Drawing number: siwit.co/CAD4		Responsible department: Design	
Document status: Released	Language: en	Issue date: 2026-11-18	Revision: A	Sheet: 1 / 1