Battery and switch

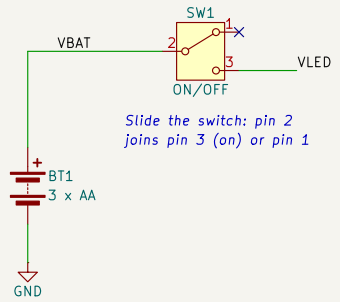

Four UV LEDs, one resistor each

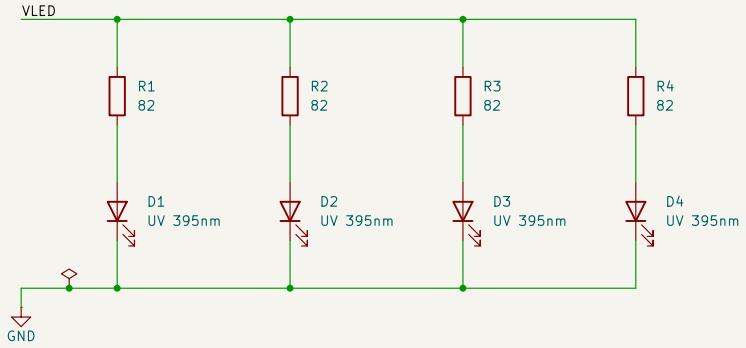

Why 82 ohm

Battery: 4.8 V fresh, 4.5 V nominal, 3.6 V near empty

Typical: (4.5 − 3.3) / 82 = 15 mA per LED, about 60 mA from the battery

Worst case: (4.8 − 3.0) / 82 = 22 mA, under the LED maximum of 30 mA

UV-A: do not look into the LEDs; wear UV-blocking glasses
3 x AA (4.5 V), one 82 ohm resistor per LED: 15 mA typical, 22 mA worst case
Created by siwit.co/PCB0 Approved by Dr. Sam Macharia
siliconwit.com

Sheet: /
File: uv-lamp.kicad_sch

Title: UV lamp, 4 x 395 nm

Size: A4	Date: 2026-11-18	**Rev: B**
KiCad E.D.A. 10.0.8		Id: 1/1